The very Best.

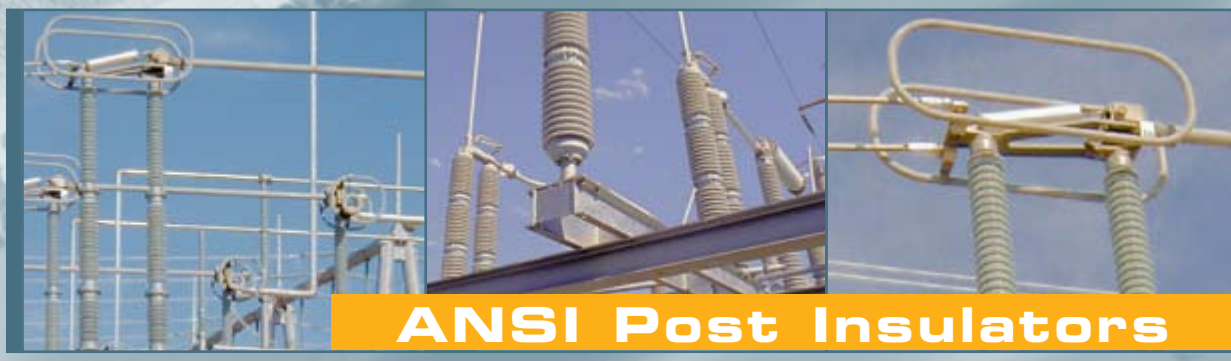

ANSI Post Insulators

PPC INSULATORS

High Tech TR Post
Never comprom

Better Design enables higher performances with less weight

› ANSI

Under normal service conditions, the post insulator is subjected to extreme electrical and mechanical stresses. These stresses vary with environmental conditions and electro-mechanical demands.

PPC Insulators, with nearly a century of experience in designing and manufacturing porcelain high voltage insulators, has developed insulators utilizing high strength C 130 body material improving design and reducing cost.

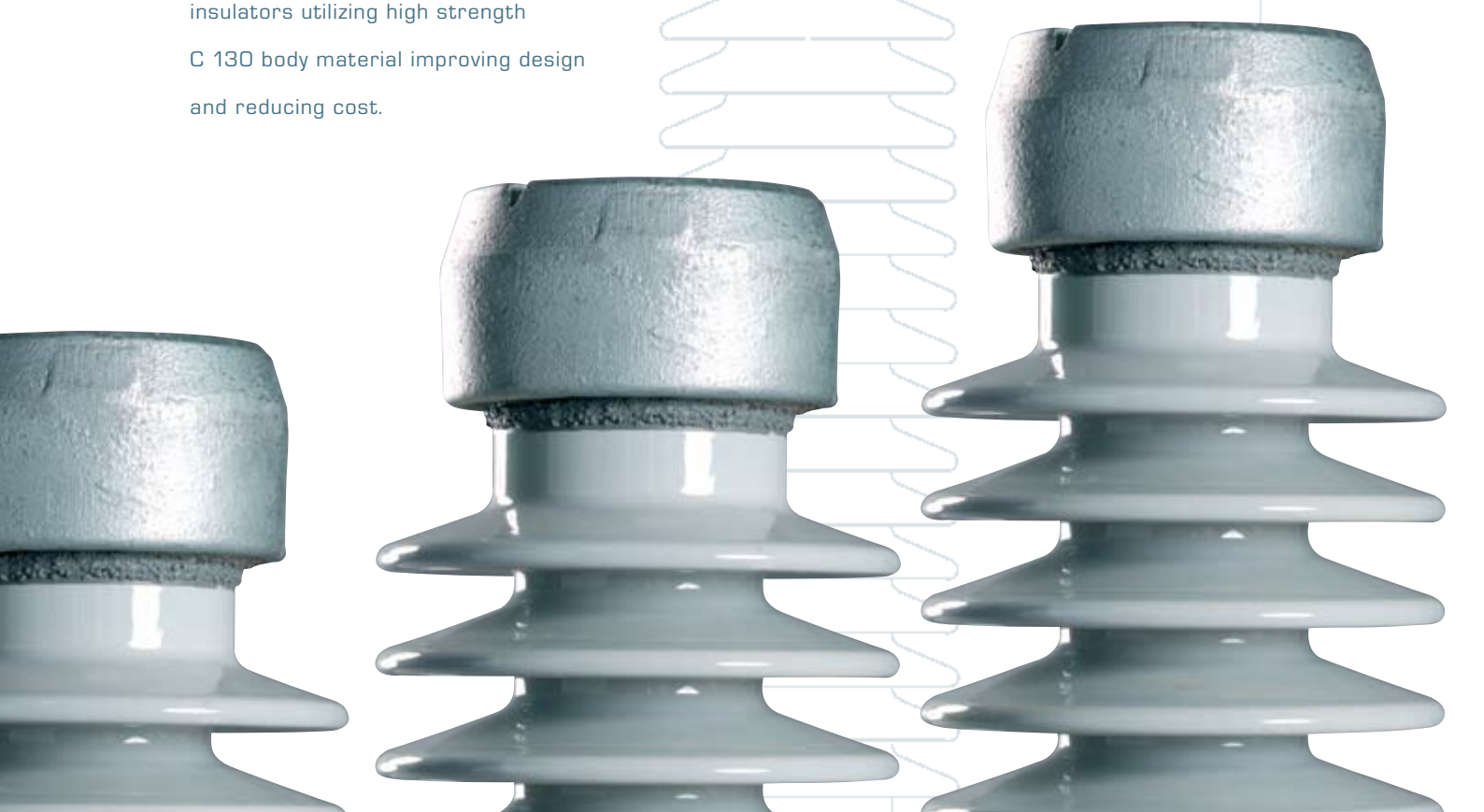

Insulators.
ise on safety!

Index

PPC INSULATORS

ANSI Post Insulators Design

Mechanical design

In-service stresses on post insulators are mainly due to cantilever loads, (e.g., weight, wind force, seismic conditions, short circuit loads). A few applications require compression strength (e.g., capacitors banks) or torsional strength (e.g., rotating disconnectors) or tensile strength (e.g., underhung post insulator).

Cantilever strength is in direct relationship to the core diameter. Thus, a high-strength insulator provides a higher strength-to-weight ratio. Advantages include a smaller diameter, reduced quantity of and smaller sized fittings, and lighter post insulators with less visual impact. The high strength C 130 body also allows for a reduction in the number of components on insulators comprised of mutiple units. The advantages provided by the reduction of additional fittings include increased strike distance/creep and less assembly time. All insulators up to and including the TR 308 are availble in a one piece design.

The weight savings are clearly shown on the below graph (TR weight per BIL level).

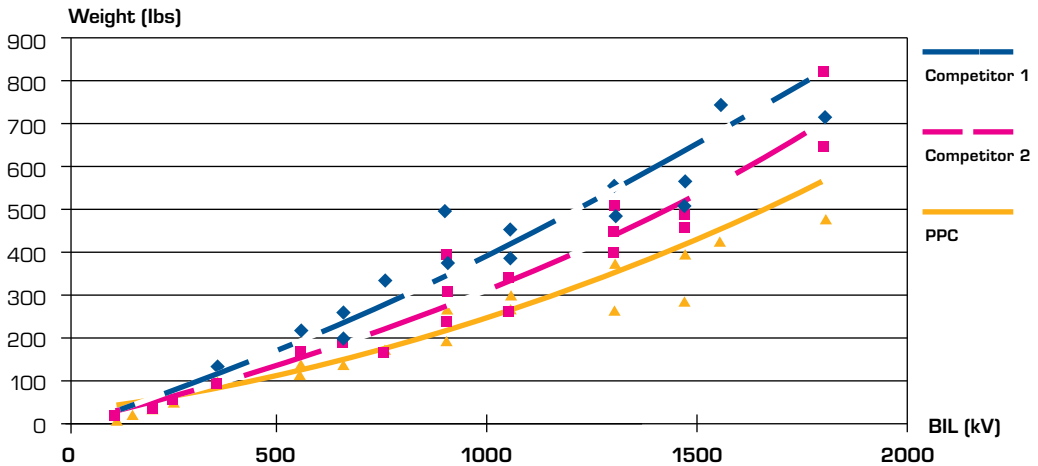

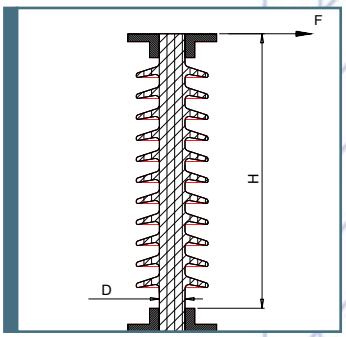

$\sigma = F \times H / (I/V)$

$I/V = \pi/32 \times D^3$

Style

Some styles can be designed with different features, number of sections, uniform or tapered as well as upright or underhung. The following codes are used throughtout the catalog to clearly show the style.

STYLE CODES		
U = Uniform, Upright and Underhung T = Tapered, Upright Only	S = Standard Strength H = High Strength E = Extra High Strength	P = Pollution, High Leakage Y = Higher Cantilever Option Z = Higher Cantilever Option

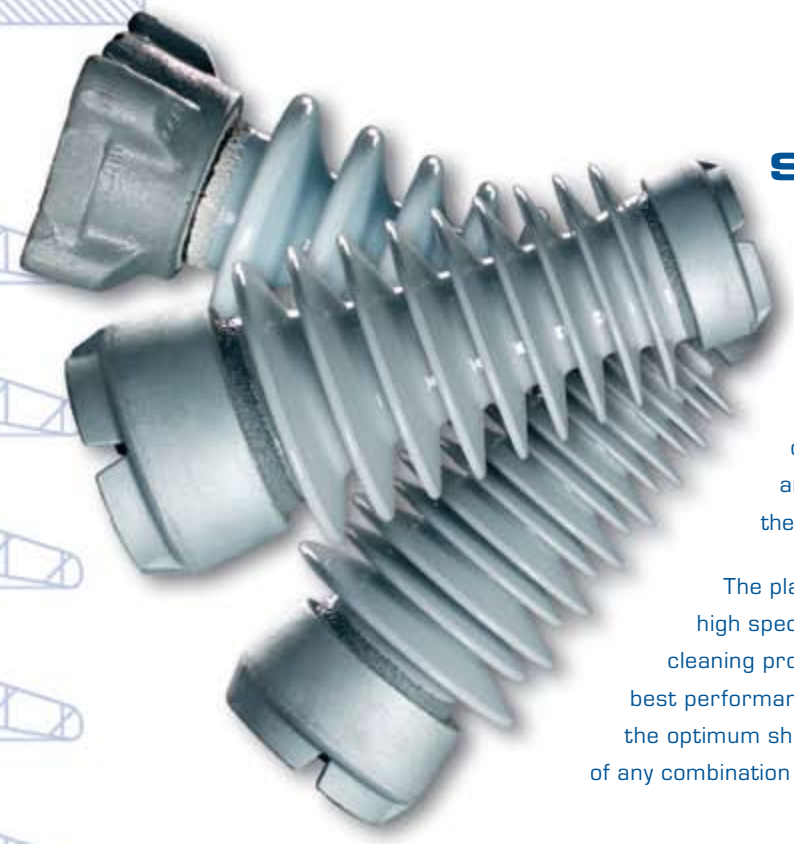

Shed design

The creepage distance required by ANSI C29.9 can be obtained with different shed designs. But some rules, which are the result from many years of experience acquired worldwide, are listed below in order to give you the best service for your long term benefit.

The plain alternative shed design offers high specific creepage distance and good self cleaning properties which usually provides best performance. Today, any design can have the optimum shed configuration consisting of any combination of sheds.

Plain Shed | Alternating Shed | Standard Shed

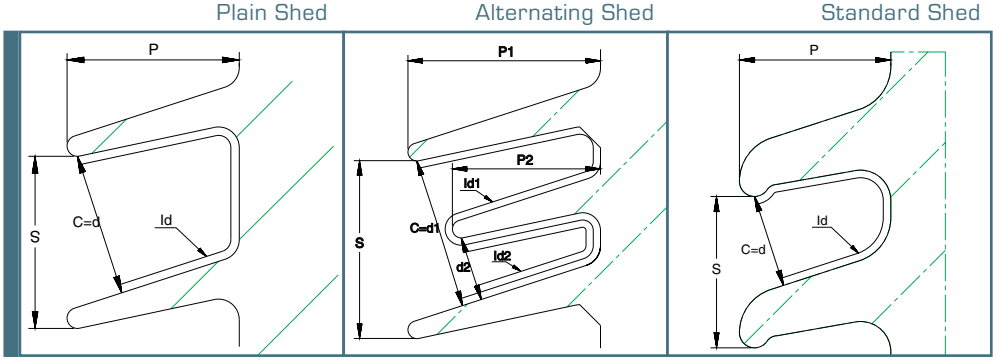

Parameters Characterizing Insulator Profile

1. Minimum distance, c, between sheds shall be ≥ 1.18 " (30 mm)

2. Ratio s/p between spacing and overhang ≥ 0.65

3. Ratio l_d/d between creepage distance and clearance

- This ratio must be calculated for the "worst case" on any section (ld_1/d_1, ld_2/d_2)
- It must be < 5

4. Alternating shed

- $p_1 - p_2 \geq 0.59"$ (15mm)

Parameters Characterizing Entire Insulator

As a post insulator can be designed with more than one section with different shed designs the following parameters are used for the entire insulator:

1. Creepage factor C.F.

- C.F.≤3.5 for pollution levels 1 and 2 (light and medium pollution level)
- C.F.≤4 for pollution levels 3 and 4 (heavy and very heavy pollution level)

C.F. = lt / St **lt** = creepage distance **St** = strike distance

2. Profile factor P.F.

- $P.F. = \frac{2p_1 + 2p_2 + s}{l}$ alternating sheds
- $P.F. = \frac{2p + s}{l}$ all other sheds

with **l** = creepage distance of the insulated leakage path measured between the two points which define **s**

- P.F. > 0.8 for pollution levels 1 and 2 (light and medium pollution level)
- P.F. > 0.7 for pollution levels 3 and 4 (heavy and very heavy pollution level)

ANSI Post Insulators

K-value Increased Pollution Performance Equalized Field Distribution

Basically, **K-value design** is a method to improve traditional creepage distance. In its full extent, K-value design is a method to reduce weight, volume and space while improving properties in-service by increasing pollution performance and equalizing electrical fields.

K-value is the unit for insulator shape and IEC 60507 defines the formula as form factor:

$$F = \int dl / p(l)$$

l is the creepage distance
p(l) is the circumference of the insulator as a function of l.

Form factor used as a design method is referred to as K-value and can be used for different types of improvements.

Creepage distance considers a leakage current as traveling over the insulator profile, in a linear path, identifying only distance.

K-value considers a leakage current as traveling along the insulator, over its complete surface. It calculates reduced diameter and/or increased creepage distance for higher resistance against the leakage currents. K-value identifies an insulator's total shape, i.e., geometric (ohmic) resistance against leakage currents.

The shape of the insulator must be calculated for the optimum design of pollution performance. The traditional calculation of creepage distance is sometimes sufficient, but to achieve the best performance in relation to material and space used, K-value design is necessary.

PPC Insulators offers complete computer design of K-value, integrated with electrical, mechanical, dimension and material calculations.

Design

Fittings

Fittings are made in malleable cast or ductile iron, hot dip galvanized according ASTM A-153M.

Standard Sizes	
3-inch bolt circle diameter:	4 tapped holes, 1/2 inch –13 +.015 oversize 1/2" Full Thread Depth (tap after hot dip galvanizing)
5-inch bolt circle diameter:	4 tapped holes, 5/8 inch-11 +.015 oversize. 5/8" Full Thread Depth (tap after hot dip galvanizing)
7-inch bolt circle diameter:	4 tapped holes, 3/4 inch-10 +.015 oversize. 3/4" Full Thread Depth (tap after hot dip galvanizing)
The holes are tapped 0.015" oversize to allow for use of galvanized cap screws.	
12-inch bolt circle diameter:	8 holes, according to drawings
14-inch bolt circle diameter:	8 holes, according to drawings

NOTE: When the insulator is made of more than one section, hardware required for assembly is delivered with the shipment.

RIV

If corona rings are necessary to meet the requirements, this is indicated in the tables.

ANSI Post Insulators Production

The **PPC** production facilities for TR station post insulators manufacture in full accordance with ANSI C29.9. Insulation requirements are available in ratings from 95 kV to 2050 kV BIL. Special requirements can be also offered upon request. This catalog, which includes standard ANSI TRs as well as extra high strength, additional creepage distance and different BCD, is updated continuously.

Glazing

Glazing is grey in accordance to ANSI Z55.1 and conforms to Munsell notation 5BG 7.0/0.4. Brown glaze is also available. Semi-conductive surface glazing can be provided for special polluted environments.

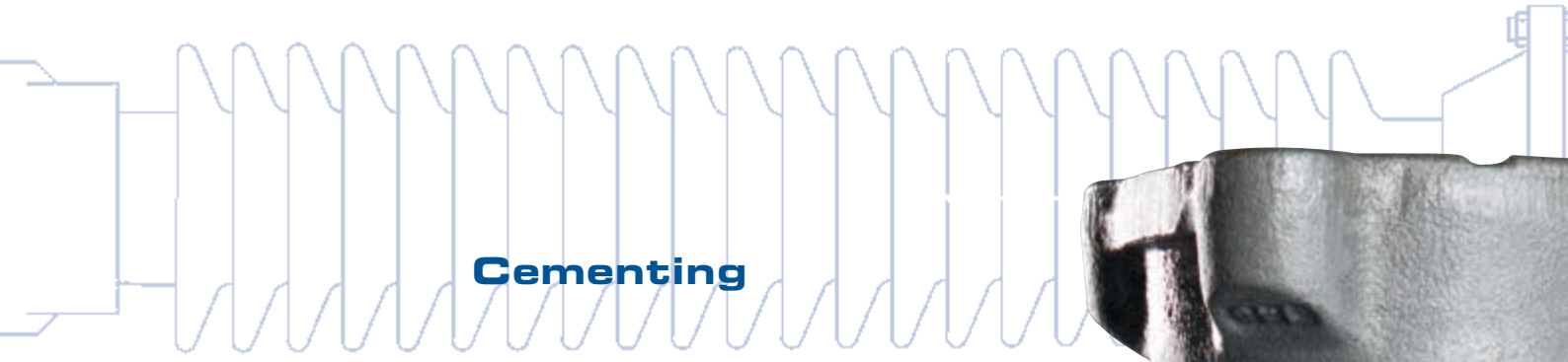

Cementing

The fittings are assembled to the porcelain with a Portland base mortar. A bituminous coating is applied on the porcelain and the fittings to compensate for the difference in thermal expansion. This is especially important for extreme weather applications.

Quality Assurance

Quality procedures are applied throughout the production process according to **ISO 9000**. Per **ANSI C29.9**, insulators are tested to confirm Design. Quality and Routine tests are performed on each unit throughout production.

Tested Items	Design Test § 7.2	Quality Conformance Test § 7.3	Routine Test § 7.4
Low Frequency Wet Withstand § 7.2.1	✓		
Critical Impulse Flashover, Positive § 7.2.2	✓		
Impulse Witstand § 7.2.3	✓		
Radio Influence Voltage § 7.2.4	✓		
Mechanical Failing load:			
› cantilever strength § 7.3.4		✓	
› tensile strength § 7.3.5		✓	
› compression strength § 7.2.6	✓		
› torsional strength § 7.2.7	✓		
Thermal Shock §7.2.5	✓		
Visual and Dimensional Tests §7.3.1		✓	
Porosity §7.3.2		✓	
Galvanizing Test §7.3.3		✓	
Mechanical Proof §7.4.2			✓

Post insulator mechanical strength is designed with regards to ANSI C29.9 cantilever ratings. Resulting mechanical values often exceed ANSI ratings for compression, torsion and tensile strengths. For standardization, ANSI ratings are used in the specification tables, pages 10 - 26. Actual ultimate breaking values are available upon request.

Tolerances

› Alignment of fixing holes

The line between two opposite axes of holes of the top fitting have to be in line with corresponding line of the bottom fitting within the specified angle.

1° standard

› Coaxiality and concentricity

The center line of the pitch circle diameter of the two fittings should fit into a cylinder with diameter equal to

2 x (0.5 + height of insulator in meters) **mm**

or **0.002 x** (20+ height of insulator in inches) **in**

› Plane parallelism

0.5 x (height of insulator in meters) **mm**

or **0.0005 x** (height of insulator in inches) **in**

Conversion Table

1 inch	25.4 mm
1 pound	4.448 N
1 inch-pound	0.113 Nm

ANSI Post Insulators

95 kV-110 kV BIL

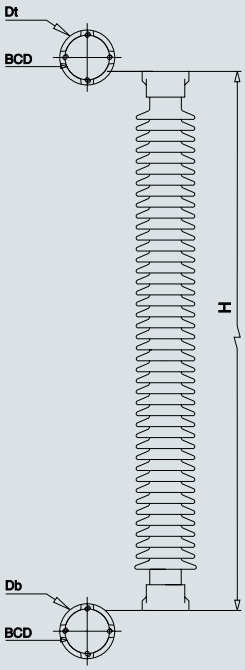

BIL	95 kV			110 kV		
STYLE	UNIFORM			UNIFORM		
CATALOG NUMBER	95 SU	95 HU	95 EU	110 SU	110 HU	110 EU
ANSI TECHNICAL REFERENCE	TR202	TR222		TR205	TR225	
NON ANSI DECSCRIPTION	95-2000	95-4000	95-8000	110-2000	110-4000	110-8000
Dimensions						
Leakage Distance (in)	10.5	10.5	10.5	15.5	15.5	17
Height (in)	7.5	10	10	10	12	12
Max Shed Diameter (in)	7.1	8	8.9	7	8.2	10.2
Top BCD (in)	3	5	5	3	5	5
Diameter Dt (in)	3.9	6.2	6.2	4.1	6.2	6.3
Bottom BCD (in)	3	5	5	3	5	5
Diameter Db (in)	3.9	6.2	6.2	4.1	6.2	6.3
Mechanical Values						
Cantilever Strength, Upright, Pounds	2000	4000	8000	2000	4000	8000
Tensile Strength, Pounds	7000	20000	28000	85000	20000	28000
Torsion Strength, Inch-Pounds	6000	30000	40000	7000	14000	40000
Compression Strength, Pounds	10000	100000	40000	10000	20000	40000
Electrical Values						
Impulse Flashover, Positive, kV	105	105	105	125	125	125
Low Frequency Withstand, 10 Sec. Wet, kV	30	30	30	45	45	45
Impulse Withstand, kV	95	95	95	110	110	110
Radio Influence Voltage Data						
Test Voltage, Rms to Ground, kV	5	5	5	10	10	10
Maximum RIV, Microvolts at 1000kHz	50	50	50	50	50	50
Weight						
Approximate Net Weight, Pounds	13	31	37	17	38	53

S = Standard Strength
H = High Strength
E = Extra High Strength

U = Uniform, Upright and Underhung
T = Tapered, Upright Only

P = Pollution/High Leakage
Y = Higher Cantilever Option
Z = Higher Cantilever Option

BCD = Bolt Circle Diameter
Dt = Diameter Top Fitting
Db = Diameter Bottom Fitting

ANSI Post Insulators

150 kV-200 kV BIL

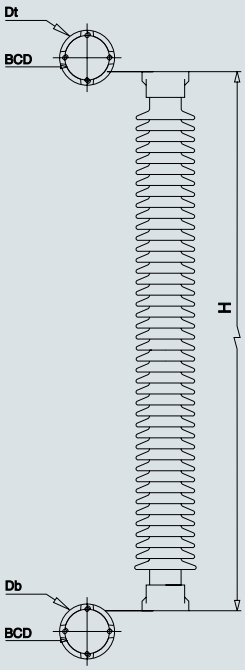

BIL	150 kV			200 kV		
STYLE	UNIFORM			UNIFORM		
CATALOG NUMBER	150 SU	150 HU	150 EU	200 SU	200 HU	200 EU
ANSI TECHNICAL REFERENCE	TR208	TR227		TR210	TR231	
NON ANSI DECSCRIPTION	150-2000	150-4000	150-8000	200-2000	200-4000	200-8000
Dimensions						
Leakage Distance (in)	24	24	24	37	37	37
Height (in)	14	15	15	18	20	20
Max Shed Diameter (in)	6.3	7.1	10.8	6.9	8.6	11.9
Top BCD (in)	3	5	5	3	5	5
Diameter Dt (in)	4.3	6.2	6.3	5	6.4	6.7
Bottom BCD (in)	3	5	5	3	5	5
Diameter Db (in)	4.3	6.2	6.3	5	6.4	6.7
Mechanical Values						
Cantilever Strength, Upright, Pounds	2000	4000	8000	2000	4000	8000
Tensile Strength, Pounds	10000	20000	28000	12000	25000	28000
Torsion Strength, Inch-Pounds	8000	16000	40000	10000	20000	40000
Compression Strength, Pounds	10000	20000	40000	15000	30000	60000
Electrical Values						
Impulse Flashover, Positive, kV	170	170	170	225	225	225
Low Frequency Withstand, 10 Sec. Wet, kV	60	60	60	80	80	80
Impulse Withstand, kV	150	150	150	200	200	200
Radio Influence Voltage Data						
Test Voltage, Rms to Ground, kV	15	15	15	22	22	22
Maximum RIV, Microvolts at 1000kHz	100	100	100	100	100	100
Weight						
Approximate Net Weight, Pounds	29	41	66	47	81	111

S = Standard Strength
H = High Strength
E = Extra High Strength

U = Uniform, Upright and Underhung
T = Tapered, Upright Only

P = Pollution/High Leakage
Y = Higher Cantilever Option
Z = Higher Cantilever Option

BCD = Bolt Circle Diameter
Dt = Diameter Top Fitting
Db = Diameter Bottom Fitting

ANSI Post Insulators

250 kV-350 kV BIL

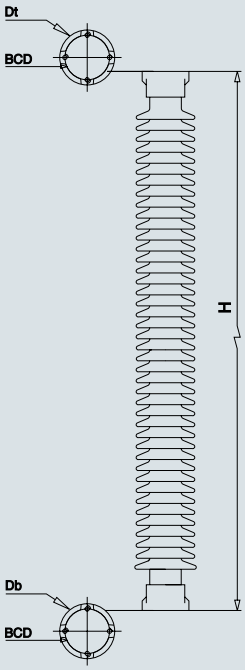

BIL	250 kV			350 kV		
STYLE	UNIFORM			UNIFORM		
CATALOG NUMBER	250 SU	250 HU	250 EU	350 SU	350 HU	350 EU
ANSI TECHNICAL REFERENCE	TR214	TR267		TR216	TR278	
NON ANSI DECSCRIPTION	250-2000	250-4000	250-8000	350-1500	350-3000	350-6000
Dimensions						
Leakage Distance (in)	43	43	43	72	72	72
Height (in)	22	24	25	30	30	32
Max Shed Diameter (in)	7.3	9	10.6	7.1	9.8	11.1
Top BCD (in)	3	5	7	3	5	7
Diameter Dt (in)	5	6.4	8.7	5	6.4	8.7
Bottom BCD (in)	3	5	7	3	5	7
Diameter Db (in)	5	6.4	8.7	5	6.4	8.7
Mechanical Values						
Cantilever Strength, Upright, Pounds	2000	4000	8000	1500	3000	6000
Tensile Strength, Pounds	14000	28000	28000	16000	25000	40000
Torsion Strength, Inch-Pounds	12000	84000	90000	15000	71000	90000
Compression Strength, Pounds	15000	100000	120000	25000	100000	120000
Electrical Values						
Impulse Flashover, Positive, kV	280	280	280	390	390	390
Low Frequency Withstand, 10 Sec. Wet, kV	100	100	100	145	145	145
Impulse Withstand, kV	250	250	250	350	350	350
Radio Influence Voltage Data						
Test Voltage, Rms to Ground, kV	30	30	30	44	44	44
Maximum RIV, Microvolts at 1000kHz	200	200	200	200	200	200
Weight						
Approximate Net Weight, Pounds	53	94	168	73	124	202

S = Standard Strength
H = High Strength
E = Extra High Strength

U = Uniform, Upright and Underhung
T = Tapered, Upright Only

P = Pollution/High Leakage
Y = Higher Cantilever Option
Z = Higher Cantilever Option

BCD = Bolt Circle Diameter
Dt = Diameter Top Fitting
Db = Diameter Bottom Fitting

ANSI Post Insulators

550 kV BIL

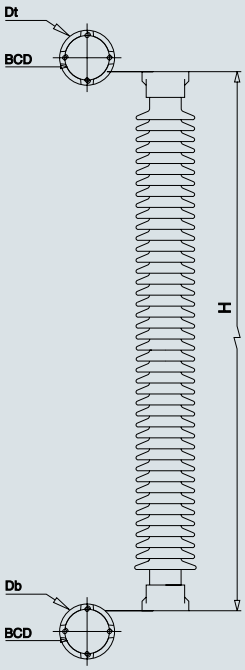

BIL	550 kV					
STYLE	UNIFORM			UNIFORM		
				HIGH LEAKAGE		
CATALOG NUMBER	550 SU	550 HU	550 EU	550 SUP	550 HUP	550 EUP
ANSI TECHNICAL REFERENCE	TR286	TR287				
NON ANSI DECSCRIPTION	550-1700	550-2600	550-5000	550-1700	550-2600	550-5000
Dimensions						
Leakage Distance (in)	99	99	95	125	125	120
Height (in)	45	45	45	45	45	45
Max Shed Diameter (in)	7.3	7.1	10.4	9.3	10	11.5
Top BCD (in)	5	5	7	5	5	7
Diameter Dt (in)	6.3	6.3	8.7	6.3	6.3	8.7
Bottom BCD (in)	5	5	7	5	5	7
Diameter Db (in)	6.3	6.3	8.7	6.3	6.3	8.7
Mechanical Values						
Cantilever Strength, Upright, Pounds	1700	2600	5000	1700	2600	5000
Tensile Strength, Pounds	25000	36000	40000	20000	25000	40000
Torsion Strength, Inch-Pounds	40000	90000	120000	40000	90000	120000
Compression Strength, Pounds	60000	150000	120000	60000	75000	120000
Electrical Values						
Impulse Flashover, Positive, kV	610	610	610	610	610	610
Low Frequency Withstand, 10 Sec. Wet, kV	230	230	230	230	230	230
Impulse Withstand, kV	550	550	550	550	550	550
Radio Influence Voltage Data						
Test Voltage, Rms to Ground, kV	73	73	73	73	73	73
Maximum RIV, Microvolts at 1000kHz	200	200	200	200	200	200
Weight						
Approximate Net Weight, Pounds	124	118	262	147	178	276

S = Standard Strength
H = High Strength
E = Extra High Strength

U = Uniform, Upright and Underhung
T = Tapered, Upright Only

P = Pollution/High Leakage
Y = Higher Cantilever Option
Z = Higher Cantilever Option

BCD = Bolt Circle Diameter
Dt = Diameter Top Fitting
Db = Diameter Bottom Fitting

ANSI Post Insulators

650 kV BIL

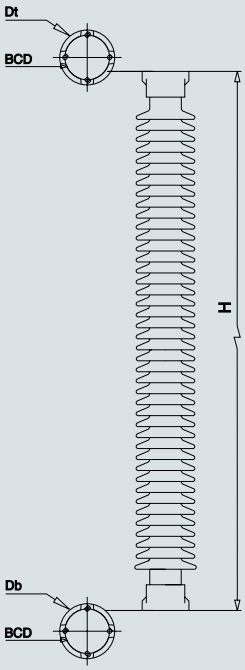

BIL	650 kV					
STYLE	UNIFORM			UNIFORM		
				HIGH LEAKAGE		
CATALOG NUMBER	650 SU	650 HU	650 EU	650 SUP	650 HUP	650 EUP
ANSI TECHNICAL REFERENCE	TR288	TR289				
NON ANSI DECSCRIPTION	650-1450	650-2200	650-4100	650-1450	650-2200	650-4100
Dimensions						
Leakage Distance (in)	116	116	116	155	155	150
Height (in)	54	54	54	54	54	54
Max Shed Diameter (in)	7.3	7.8	10.2	9.5	9.9	11.7
Top BCD (in)	5	5	7	5	5	7
Diameter Dt (in)	6.3	6.7	8.7	6.3	6.3	8.7
Bottom BCD (in)	5	5	7	5	5	7
Diameter Db (in)	6.3	6.7	8.7	6.3	6.3	8.7
Mechanical Values						
Cantilever Strength, Upright, Pounds	1000	2200	4100	1450	2200	4100
Tensile Strength, Pounds	20000	36000	40000	20000	25000	40000
Torsion Strength, Inch-Pounds	40000	133000	120000	60000	90000	120000
Compression Strength, Pounds	60000	150000	120000	60000	75000	120000
Electrical Values						
Impulse Flashover, Positive, kV	710	710	710	710	710	710
Low Frequency Withstand, 10 Sec. Wet, kV	275	275	275	275	275	275
Impulse Withstand, kV	650	650	650	650	650	650
Radio Influence Voltage Data						
Test Voltage, Rms to Ground, kV	88	88	88	88	88	88
Maximum RIV, Microvolts at 1000kHz	200	200	200	200	200	200
Weight						
Approximate Net Weight, Pounds	139	195	308	191	213	287

S = Standard Strength
H = High Strength
E = Extra High Strength

U = Uniform, Upright and Underhung
T = Tapered, Upright Only

P = Pollution/High Leakage
Y = Higher Cantilever Option
Z = Higher Cantilever Option

BCD = Bolt Circle Diameter
Dt = Diameter Top Fitting
Db = Diameter Bottom Fitting

ANSI Post Insulators

750 kV BIL

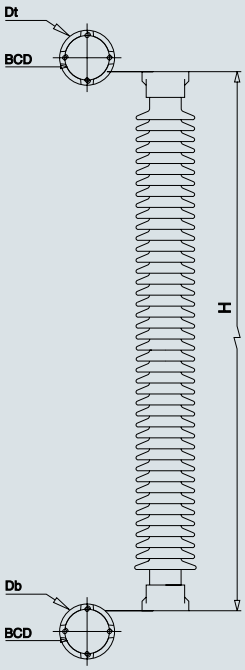

BIL	750 kV					
STYLE	UNIFORM			UNIFORM		
				HIGH LEAKAGE		
CATALOG NUMBER	750 SU	750 HU	750 EU	750 SUP	750 HUP	750 EUP
ANSI TECHNICAL REFERENCE	TR291	TR295				
NON ANSI DECSCRIPTION	750-1200	750-1850	750-3500	750-1200	750-1850	750-3500
Dimensions						
Leakage Distance (in)	132	132	132	180	180	180
Height (in)	62	62	62	62	62	62
Max Shed Diameter (in)	7.3	8.6	10.2	9.5	10	11.6
Top BCD (in)	5	5	7	5	5	7
Diameter Dt (in)	6.2	6.7	8.7	6.3	6.3	8.7
Bottom BCD (in)	5	5	7	5	5	7
Diameter Db (in)	6.2	6.7	8.7	6.3	6.3	8.7
Mechanical Values						
Cantilever Strength, Upright, Pounds	1200	1850	3500	1200	1850	3500
Tensile Strength, Pounds	20000	25000	40000	20000	25000	40000
Torsion Strength, Inch-Pounds	40000	90000	120000	40000	90000	120000
Compression Strength, Pounds	60000	75000	120000	60000	75000	120000
Electrical Values						
Impulse Flashover, Positive, kV	810	810	810	810	810	810
Low Frequency Withstand, 10 Sec. Wet, kV	315	315	315	315	315	315
Impulse Withstand, kV	750	750	750	750	750	750
Radio Influence Voltage Data						
Test Voltage, Rms to Ground, kV	103	103	103	103	103	103
Maximum RIV, Microvolts at 1000kHz	500	500	500	500	500	500
Weight						
Approximate Net Weight, Pounds	157	230	341	216	242	386

S = Standard Strength
H = High Strength
E = Extra High Strength

U = Uniform, Upright and Underhung
T = Tapered, Upright Only

P = Pollution/High Leakage
Y = Higher Cantilever Option
Z = Higher Cantilever Option

BCD = Bolt Circle Diameter
Dt = Diameter Top Fitting
Db = Diameter Bottom Fitting

ANSI Post Insulators

900 kV BIL

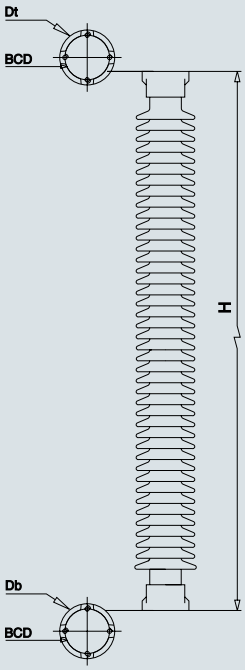

BIL	900 kV					
STYLE	TAPERED			UNIFORM		
CATALOG NUMBER		900 HT	900 ET	900 SU	900 HU	900 EU
ANSI TECHNICAL REFERENCE		TR308		TR304	TR308	
NON ANSI DECSCRIPTION		900-1450	900-2750	900-950	900-1450	900-2750
Dimensions						
Leakage Distance (in)		170	173	166	173	167
Height (in)		80	80	80	80	80
Max Shed Diameter (in)		7.5	8.6	6.7	7.7	8.6
Top BCD (in)		5	5	5	5	7
Diameter Dt (in)		6.3	6.3	6.2	6.7	8.7
Bottom BCD (in)		5	7	5	5	7
Diameter Db (in)		6.7	8.7	6.2	6.7	8.7
Mechanical Values						
Cantilever Strength, Upright, Pounds		1450	2750	950	1450	2750
Tensile Strength, Pounds		25000	25000	20000	25000	40000
Torsion Strength, Inch-Pounds		90000	90000	60000	90000	133000
Compression Strength, Pounds		75000	90000	60000	90000	150000
Electrical Values						
Impulse Flashover, Positive, kV		1010	1010	1010	1010	1010
Low Frequency Withstand, 10 Sec. Wet, kV		385	385	385	385	385
Impulse Withstand, kV		900	900	900	900	900
Radio Influence Voltage Data						
Test Voltage, Rms to Ground, kV		146	146	146	146	146
Maximum RIV, Microvolts at 1000kHz		500	500	500	500	500
Weight						
Approximate Net Weight, Pounds		236	313	170	254	342

S = Standard Strength
H = High Strength
E = Extra High Strength

U = Uniform, Upright and Underhung
T = Tapered, Upright Only

P = Pollution/High Leakage
Y = Higher Cantilever Option
Z = Higher Cantilever Option

BCD = Bolt Circle Diameter
Dt = Diameter Top Fitting
Db = Diameter Bottom Fitting

ANSI Post Insulators

900 kV BIL

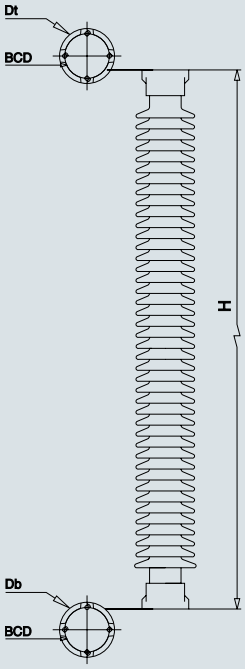

BIL	900 kV					
STYLE	TAPERED			UNIFORM	TAPERED	
	HIGH STRENGTH			HIGH LEAKAGE		
CATALOG NUMBER	900 YT	900 ZT		900 SUP	900 HTP	900 ETP
ANSI TECHNICAL REFERENCE						
NON ANSI DECSCRIPTION	900-3000	900-4000		900-950	900-1450	900-2750
Dimensions						
Leakage Distance (in)	165	171		227	229	228
Height (in)	80	80		80	80	80
Max Shed Diameter (in)	8.7	9.4		7.8	8.8	9.8
Top BCD (in)	5	5		5	5	5
Diameter Dt (in)	6.3	6.3		6.2	6.3	6.3
Bottom BCD (in)	7	12		5	5	7
Diameter Db (in)	8.7	13.2		6.2	6.7	8.7
Mechanical Values						
Cantilever Strength, Upright, Pounds	3000	4000		950	1450	2750
Tensile Strength, Pounds	25000	31500		20000	25000	25000
Torsion Strength, Inch-Pounds	90000	88500		60000	90000	90000
Compression Strength, Pounds	75000	260000		60000	75000	90000
Electrical Values						
Impulse Flashover, Positive, kV	1010	1010		1010	1010	1010
Low Frequency Withstand, 10 Sec. Wet, kV	385	385		385	385	385
Impulse Withstand, kV	900	900		900	900	900
Radio Influence Voltage Data						
Test Voltage, Rms to Ground, kV	146	146		146	146	146
Maximum RIV, Microvolts at 1000kHz	500	500		500	500	500
Weight						
Approximate Net Weight, Pounds	326	381		201	272	353

S = Standard Strength
H = High Strength
E = Extra High Strength

U = Uniform, Upright and Underhung
T = Tapered, Upright Only

P = Pollution/High Leakage
Y = Higher Cantilever Option
Z = Higher Cantilever Option

BCD = Bolt Circle Diameter
Dt = Diameter Top Fitting
Db = Diameter Bottom Fitting

ANSI Post Insulators

1050 kV BIL

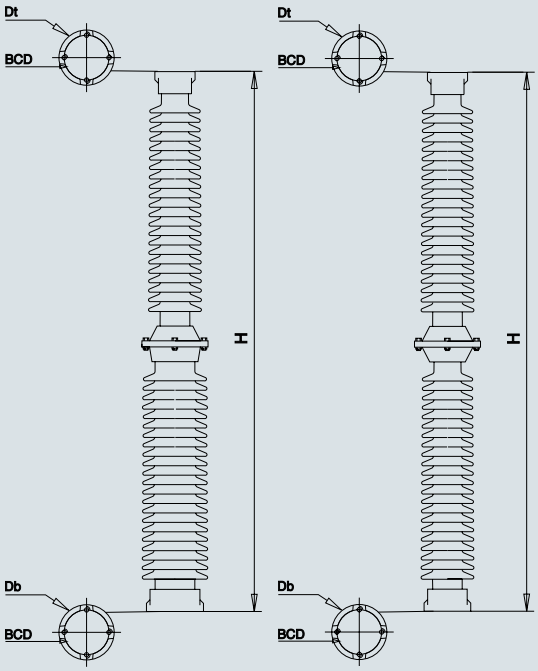

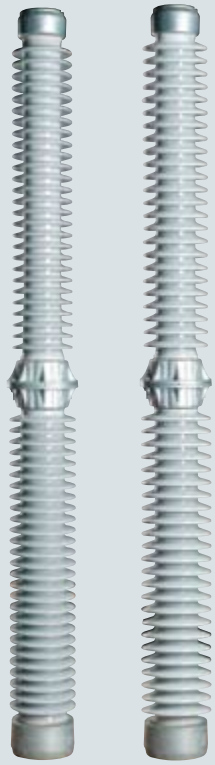

BIL	1050 kV					
STYLE	TAPERED			UNIFORM		
CATALOG NUMBER	1050 ST	1050 HT	1050 ET	1050 SU	1050 HU	1050 EU
ANSI TECHNICAL REFERENCE	TR312	TR316		TR312	TR316	TR362
NON ANSI DECSCRIPTION	1050-800	1050-1250	1050-2300	1050-800	1050-1250	1050-2300
Dimensions						
Leakage Distance (in)	205	204	206	209	207	207
Height (in)	92	92	92	92	92	92
Max Shed Diameter (in)	7.4	8	9.3	7.4	8.4	9.3
Top BCD (in)	5	5	5	5	5	7
Diameter Dt (in)	6.2	6.3	6.3	6.2	6.7	8.7
Bottom BCD (in)	5	5	7	5	5	7
Diameter Db (in)	6.2	6.7	8.7	6.2	6.7	8.7
Mechanical Values						
Cantilever Strength, Upright, Pounds	800	1250	2300	800	1250	2300
Tensile Strength, Pounds	20000	25000	25000	20000	25000	40000
Torsion Strength, Inch-Pounds	40000	90000	90000	40000	90000	90000
Compression Strength, Pounds	60000	90000	90000	60000	90000	90000
Electrical Values						
Impulse Flashover, Positive, kV	1210	1210	1210	1210	1210	1210
Low Frequency Withstand, 10 Sec. Wet, kV	455	455	455	455	455	455
Impulse Withstand, kV	1050	1050	1050	1050	1050	1050
Radio Influence Voltage Data						
Test Voltage, Rms to Ground, kV	146	146	146	146	146	146
Maximum RIV, Microvolts at 1000kHz	500	500	500	500	500	500
Weight						
Approximate Net Weight, Pounds	223	311	366	238	349	428

S = Standard Strength
H = High Strength
E = Extra High Strength

U = Uniform, Upright and Underhung
T = Tapered, Upright Only

P = Pollution/High Leakage
Y = Higher Cantilever Option
Z = Higher Cantilever Option

BCD = Bolt Circle Diameter
Dt = Diameter Top Fitting
Db = Diameter Bottom Fitting

ANSI Post Insulators

1050 kV BIL

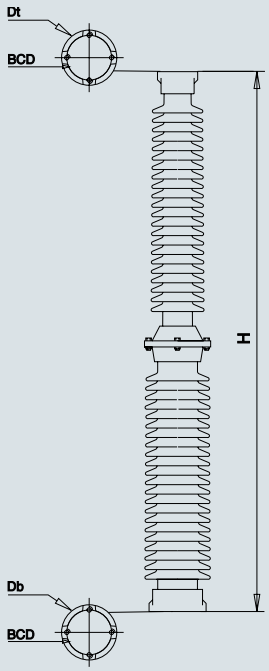

BIL	1050 kV					
STYLE	TAPERED					
	HIGH STRENGTH			HIGH LEAKAGE		
CATALOG NUMBER	1050 YT	1050 ZT		1050 STP	1050 HTP	1050 ETP
ANSI TECHNICAL REFERENCE						
NON ANSI DECSCRIPTION	1050-3500	1050-5000		1050-800	1050-1250	1050-2300
Dimensions						
Leakage Distance (in)	209	317		268	271	270
Height (in)	92	92		92	92	92
Max Shed Diameter (in)	10.4	13.5		8.7	9.5	10.4
Top BCD (in)	7	7		5	5	5
Diameter Dt (in)	8.7	8.7		6.2	6.3	6.3
Bottom BCD (in)	12	11.8		5	5	7
Diameter Db (in)	13.2	13.2		6.2	6.7	8.7
Mechanical Values						
Cantilever Strength, Upright, Pounds	3500	5000		800	1250	2300
Tensile Strength, Pounds	40000	40000		20000	25000	25000
Torsion Strength, Inch-Pounds	133000	115000		40000	90000	90000
Compression Strength, Pounds	150000	120000		60000	90000	90000
Electrical Values						
Impulse Flashover, Positive, kV	1210	1210		1210	1210	1210
Low Frequency Withstand, 10 Sec. Wet, kV	455	455		455	455	455
Impulse Withstand, kV	1050	1050		1050	1050	1050
Radio Influence Voltage Data						
Test Voltage, Rms to Ground, kV	146	146		146	146	146
Maximum RIV, Microvolts at 1000kHz	500	500		500	500	500
Weight						
Approximate Net Weight, Pounds	492	626		258	357	404

S = Standard Strength
H = High Strength
E = Extra High Strength

U = Uniform, Upright and Underhung
T = Tapered, Upright Only

P = Pollution/High Leakage
Y = Higher Cantilever Option
Z = Higher Cantilever Option

BCD = Bolt Circle Diameter
Dt = Diameter Top Fitting
Db = Diameter Bottom Fitting

ANSI Post Insulators

1300 kV BIL

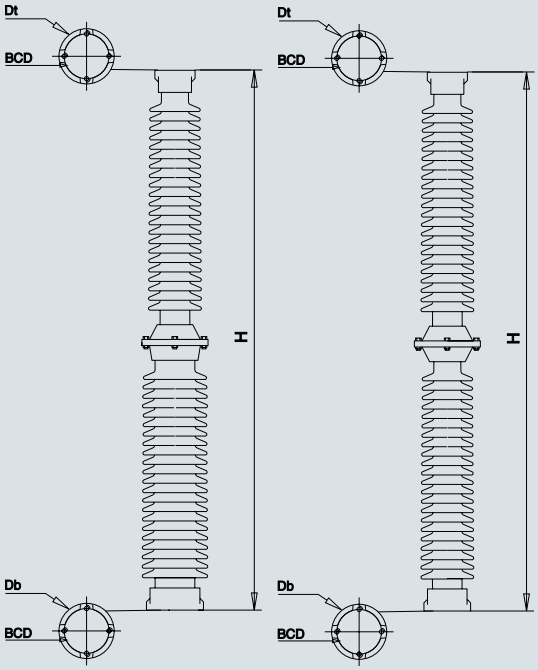

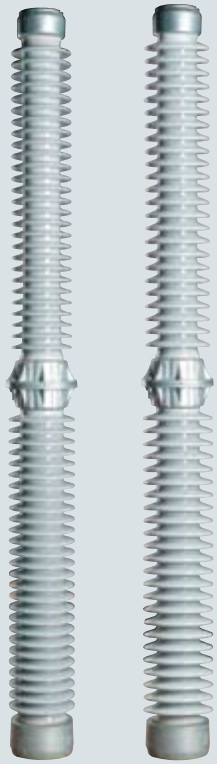

BIL	1300 kV					
STYLE	TAPERED			UNIFORM		
CATALOG NUMBER	1300 ST	1300 HT	1300 ET	1300 SU	1300 HU	1300 EU
ANSI TECHNICAL REFERENCE	TR324	TR367	TR369	TR324		TR368
NON ANSI DECSCRIPTION	1300-1000	1300-1450	1300-2050	1300-1000	1300-1450	1300-2050
Dimensions						
Leakage Distance (in)	241	232	234	242	244	240
Height (in)	106	106	106	106	106	106
Max Shed Diameter (in)	8	8.3	9.2	8	8.6	9.3
Top BCD (in)	5	5	5	5	7	7
Diameter Dt (in)	6.3	6.2	6.3	6.3	8.7	8.7
Bottom BCD (in)	5	7	7	5	7	7
Diameter Db (in)	6.3	8.7	8.7	6.3	8.7	8.7
Mechanical Values						
Cantilever Strength, Upright, Pounds	1000	1450	2050	1000	1450	2050
Tensile Strength, Pounds	25000	20000	40000	25000	20000	40000
Torsion Strength, Inch-Pounds	90000	40000	90000	90000	40000	120000
Compression Strength, Pounds	75000	60000	150000	75000	60000	120000
Electrical Values						
Impulse Flashover, Positive, kV	1410	1410	1410	1410	1410	1410
Low Frequency Withstand, 10 Sec. Wet, kV	525	525	525	525	525	525
Impulse Withstand, kV	1300	1300	1300	1300	1300	1300
Radio Influence Voltage Data						
Test Voltage, Rms to Ground, kV	220	220	220	220	220	220
Maximum RIV, Microvolts at 1000kHz	1000	1000	1000	1000	1000	1000
Weight						
Approximate Net Weight, Pounds	324	320	457	326	406	512

S = Standard Strength
H = High Strength
E = Extra High Strength

U = Uniform, Upright and Underhung
T = Tapered, Upright Only

P = Pollution/High Leakage
Y = Higher Cantilever Option
Z = Higher Cantilever Option

BCD = Bolt Circle Diameter
Dt = Diameter Top Fitting
Db = Diameter Bottom Fitting

ANSI Post Insulators

1300 kV BIL

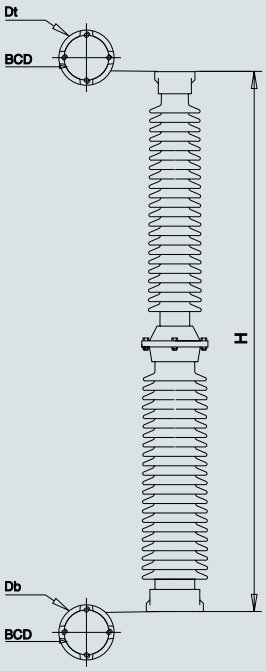

BIL	1300 kV					
STYLE	TAPERED					
	HIGH STRENGTH			HIGH LEAKAGE		
CATALOG NUMBER	1300 YT	1300 ZT		1300 STP	1300 HTP	1300 ETP
ANSI TECHNICAL REFERENCE						
NON ANSI DECSCRIPTION	1300-3000	1300-4000		1300-1000	1300-1450	1300-2050
Dimensions						
Leakage Distance (in)	237	233		326	322	315
Height (in)	106	106		106	106	106
Max Shed Diameter (in)	10	10.5		9.1	9.7	10.5
Top BCD (in)	5	5		5	5	5
Diameter Dt (in)	6.3	6.3		6.3	6.2	6.3
Bottom BCD (in)	12	11.8		5	7	7
Diameter Db (in)	13.2	13.2		6.3	8.7	8.7
Mechanical Values						
Cantilever Strength, Upright, Pounds	3000	4000		1000	1450	2050
Tensile Strength, Pounds	40000	40000		25000	20000	40000
Torsion Strength, Inch-Pounds	133000	133000		90000	40000	90000
Compression Strength, Pounds	150000	150000		75000	60000	150000
Electrical Values						
Impulse Flashover, Positive, kV	1410	1410		1410	1410	1410
Low Frequency Withstand, 10 Sec. Wet, kV	525	525		525	525	525
Impulse Withstand, kV	1300	1300		1300	1300	1300
Radio Influence Voltage Data						
Test Voltage, Rms to Ground, kV	220	220		220	220	220
Maximum RIV, Microvolts at 1000kHz	1000	1000		1000	1000	1000
Weight						
Approximate Net Weight, Pounds	507	544		357	381	505

S = Standard Strength
H = High Strength
E = Extra High Strength

U = Uniform, Upright and Underhung
T = Tapered, Upright Only

P = Pollution/High Leakage
Y = Higher Cantilever Option
Z = Higher Cantilever Option

BCD = Bolt Circle Diameter
Dt = Diameter Top Fitting
Db = Diameter Bottom Fitting

ANSI Post Insulators

1470 kV BIL

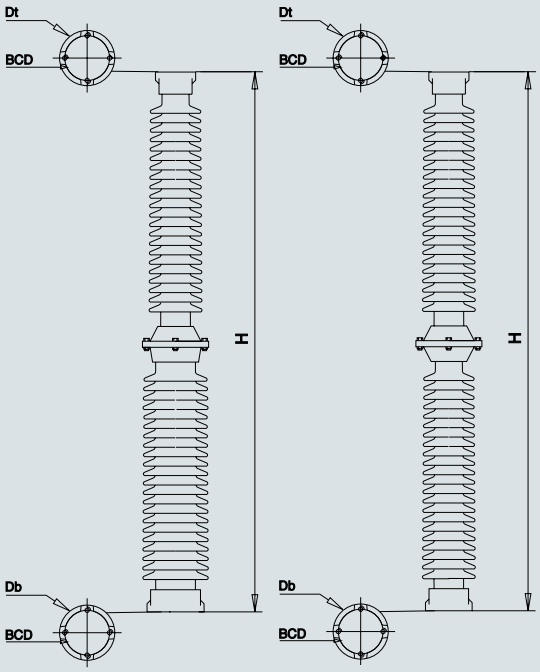

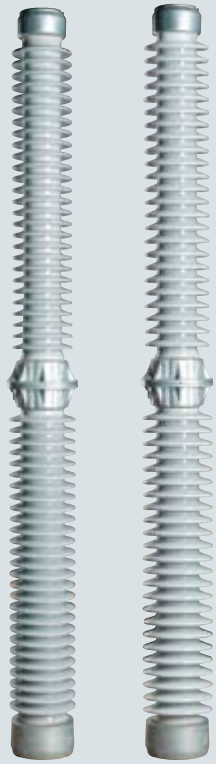

BIL	1470 kV					
STYLE	TAPERED				UNIFORM	
			HIGH LEAKAGE			
CATALOG NUMBER	1470 HT	1470 ET	1470 HTP	1470 ETP	1470 SU	1470 EU
ANSI TECHNICAL REFERENCE	TR371	TR373			TR330	TR372
NON ANSI DECSCRIPTION	1470-1170	1470-1750	1470-1000	1470-1750	1470-900	1470-1750
Dimensions						
Leakage Distance (in)	273	274	376	373	272	273
Height (in)	122	122	122	122	122	122
Max Shed Diameter (in)	8.2	8.9	9.1	10.1	8	9
Top BCD (in)	5	5	5	5	5	7
Diameter Dt (in)	6.2	6.2	6.3	6.3	6.7	8.7
Bottom BCD (in)	7	7	5	7	5	7
Diameter Db (in)	8.7	8.7	6.7	8.7	6.7	8.7
Mechanical Values						
Cantilever Strength, Upright, Pounds	1170	1750	1000	1750	900	1750
Tensile Strength, Pounds	20000	20000	25000	25000	25000	40000
Torsion Strength, Inch-Pounds	40000	40000	90000	90000	90000	120000
Compression Strength, Pounds	60000	60000	90000	90000	75000	100000
Electrical Values						
Impulse Flashover, Positive, kV	1610	1610	1610	1610	1610	1610
Low Frequency Withstand, 10 Sec. Wet, kV	590	590	590	590	590	590
Impulse Withstand, kV	1470	1470	1470	1470	1470	1470
Radio Influence Voltage Data						
Test Voltage, Rms to Ground, kV	220	220	220	220	220	220
Maximum RIV, Microvolts at 1000kHz	1000	1000	1000	1000	1000	1000
Weight						
Approximate Net Weight, Pounds	368	421	426	505	410	532

S = Standard Strength
H = High Strength
E = Extra High Strength

U = Uniform, Upright and Underhung
T = Tapered, Upright Only

P = Pollution/High Leakage
Y = Higher Cantilever Option
Z = Higher Cantilever Option

BCD = Bolt Circle Diameter
Dt = Diameter Top Fitting
Db = Diameter Bottom Fitting

ANSI Post Insulators

1550 kV BIL

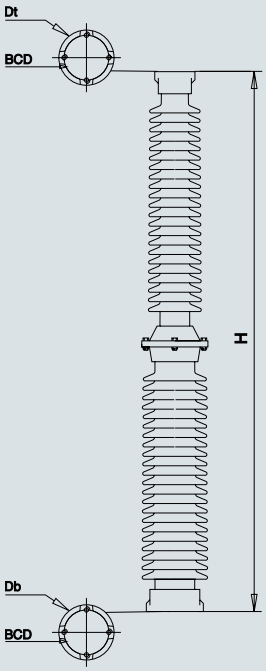

BIL	1550 kV					
STYLE	TAPERED					
				HIGH LEAKAGE		
CATALOG NUMBER	1550 ST	1550 HT	1550 ET			1550 HTP
ANSI TECHNICAL REFERENCE		TR379				
NON ANSI DECSCRIPTION	1550-1000	1550-1700	1550-2500			1550-1700
Dimensions						
Leakage Distance (in)	334	283	315			373
Height (in)	128	128	128			128
Max Shed Diameter (in)	8.7	8.9	10.4			9.9
Top BCD (in)	5	5	5			5
Diameter Dt (in)	6.2	6.2	6.2			6.3
Bottom BCD (in)	7	7	14			7
Diameter Db (in)	8.7	8.7	15.7			8.7
Mechanical Values						
Cantilever Strength, Upright, Pounds	1000	1700	2500			1700
Tensile Strength, Pounds	20000	20000	25000			25000
Torsion Strength, Inch-Pounds	60000	40000	60000			90000
Compression Strength, Pounds	60000	60000	60000			90000
Electrical Values						
Impulse Flashover, Positive, kV	1710	1710	1710			1710
Low Frequency Withstand, 10 Sec. Wet, kV	620	620	620			620
Impulse Withstand, kV	1550	1550	1550			1550
Radio Influence Voltage Data						
Test Voltage, Rms to Ground, kV	318	318	318			318
Maximum RIV, Microvolts at 1000kHz	2000	2000	2000			2000
Weight						
Approximate Net Weight, Pounds	413	457	617			516

S = Standard Strength
H = High Strength
E = Extra High Strength

U = Uniform, Upright and Underhung
T = Tapered, Upright Only

P = Pollution/High Leakage
Y = Higher Cantilever Option
Z = Higher Cantilever Option

BCD = Bolt Circle Diameter
Dt = Diameter Top Fitting
Db = Diameter Bottom Fitting

ANSI Post Insulators

1800 kV BIL

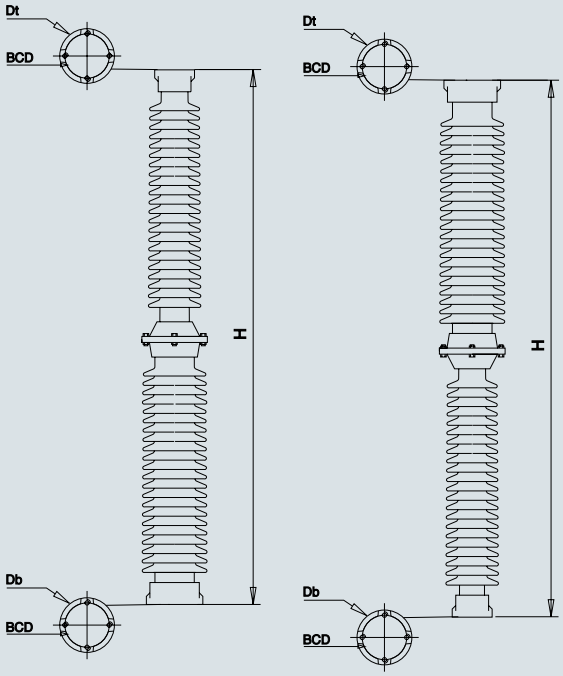

BIL	1800 kV					
STYLE	TAPERED					
			HIGH STRENGTH		HIGH LEAKAGE	
CATALOG NUMBER	1800 ST	1800 HT	1800 YT		1800 STP	1800 ETP
ANSI TECHNICAL REFERENCE	TR391					
NON ANSI DECSCRIPTION	1800-1400	1800-1750	1800-3500		1800-1400	1800-2500
Dimensions						
Leakage Distance (in)	340	346	337		450	371
Height (in)	152	152	152		152	152
Max Shed Diameter (in)	8.8	10.1	10.9		9.8	10.5
Top BCD (in)	5	5	5		5	5
Diameter Dt (in)	6.2	6.2	6.7		6.2	6.3
Bottom BCD (in)	7	14	14		7	14
Diameter Db (in)	8.7	15.7	15.4		8.7	15.7
Mechanical Values						
Cantilever Strength, Upright, Pounds	1400	1750	3500		1400	2500
Tensile Strength, Pounds	20000	20000	35000		20000	25000
Torsion Strength, Inch-Pounds	40000	60000	133000		60000	90000
Compression Strength, Pounds	60000	60000	150000		60000	90000
Electrical Values						
Impulse Flashover, Positive, kV	2000	2000	2000		2000	2000
Low Frequency Withstand, 10 Sec. Wet, kV	710	710	710		710	710
Impulse Withstand, kV	1800	1800	1800		1800	1800
Radio Influence Voltage Data						
Test Voltage, Rms to Ground, kV	318	318	318		318	318
Maximum RIV, Microvolts at 1000kHz	2000	2000	2000		2000	2000
Weight						
Approximate Net Weight, Pounds	527	651	933		585	763

S = Standard Strength
H = High Strength
E = Extra High Strength

U = Uniform, Upright and Underhung
T = Tapered, Upright Only

P = Pollution/High Leakage
Y = Higher Cantilever Option
Z = Higher Cantilever Option

BCD = Bolt Circle Diameter
Dt = Diameter Top Fitting
Db = Diameter Bottom Fitting

ANSI Post Insulators

2050 kV BIL

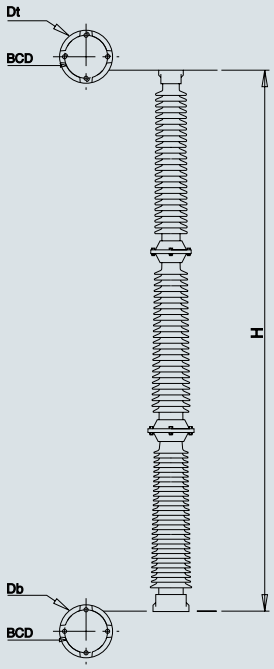

BIL	2050 kV					
STYLE	TAPERED					
				HIGH LEAKAGE		
CATALOG NUMBER	2050 ST	2050 HT	2050 ET	2050 STP		
ANSI TECHNICAL REFERENCE						
NON ANSI DECSCRIPTION	2050-1200	2050-2000	2050-3000	2050-1200		
Dimensions						
Leakage Distance (in)	416	452	414	557		
Height (in)	182	185	182	182		
Max Shed Diameter (in)	9.3	10.7	11.3	10.3		
Top BCD (in)	5	7	5	5		
Diameter Dt (in)	6.2	8.7	6.2	6.2		
Bottom BCD (in)	7	14	14	7		
Diameter Db (in)	8.7	15.7	15.4	8.7		
Mechanical Values						
Cantilever Strength, Upright, Pounds	1200	2000	3000	1200		
Tensile Strength, Pounds	20000	20000	25000	20000		
Torsion Strength, Inch-Pounds	60000	60000	75000	60000		
Compression Strength, Pounds	60000	60000	60000	60000		
Electrical Values						
Impulse Flashover, Positive, kV	2250	2250	2250	2250		
Low Frequency Withstand, 10 Sec. Wet, kV	830	830	830	830		
Impulse Withstand, kV	2050	2050	2050	2050		
Radio Influence Voltage Data						
Test Voltage, Rms to Ground, kV	350	350	350	350		
Maximum RIV, Microvolts at 1000kHz	2000	2000	2000	2000		
Weight						
Approximate Net Weight, Pounds	653	929	1083	728		

S = Standard Strength
H = High Strength
E = Extra High Strength

U = Uniform, Upright and Underhung
T = Tapered, Upright Only

P = Pollution/High Leakage
Y = Higher Cantilever Option
Z = Higher Cantilever Option

BCD = Bolt Circle Diameter
Dt = Diameter Top Fitting
Db = Diameter Bottom Fitting

The very Best.

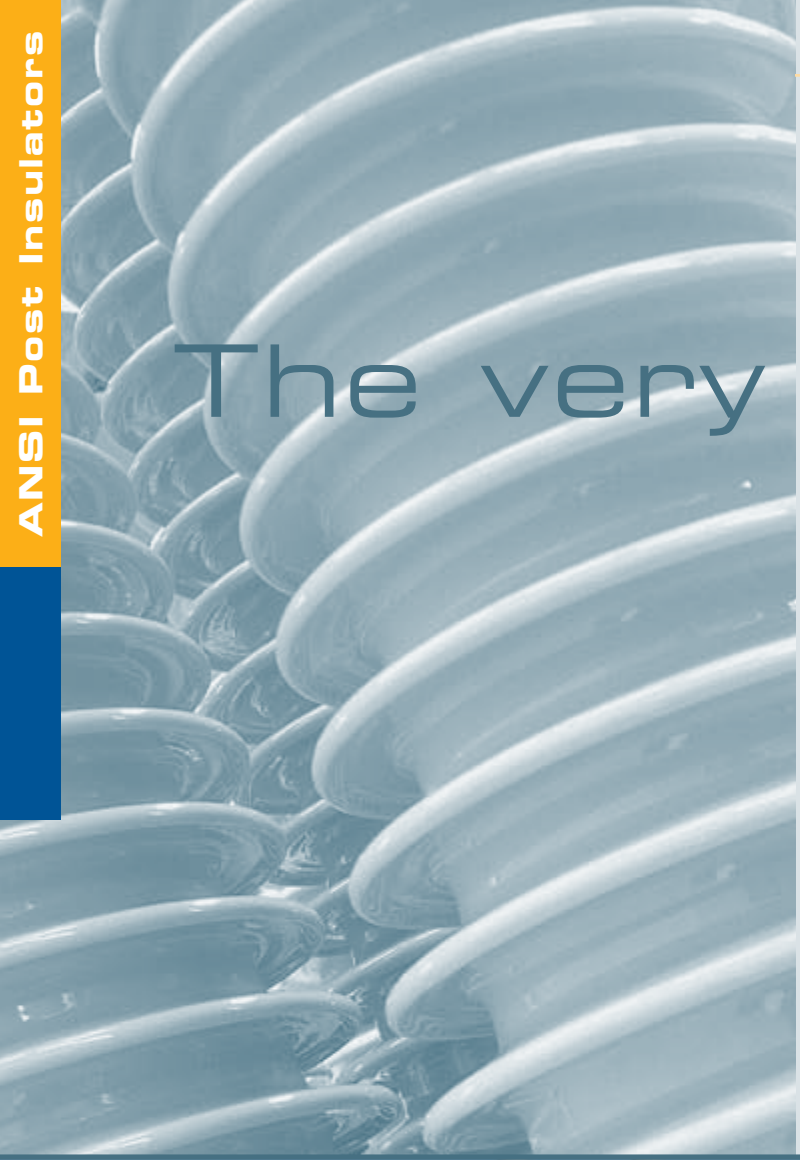

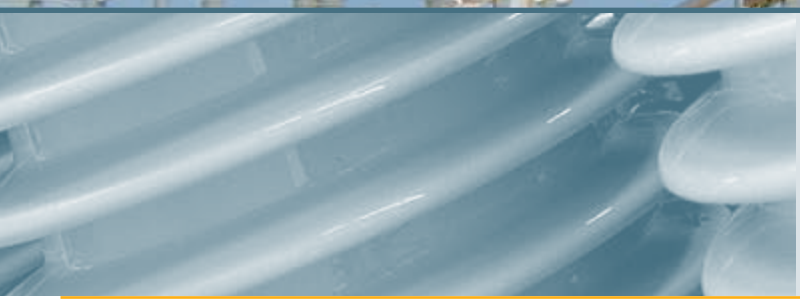

ANSI Post Insulators

Product Index

95kV-2050kV BIL

CATALOG #	ANSI	CANTILEVER	LEAKAGE	PAGE
95 SU	TR 202	2000	10.5	10
95 HU	TR 222	4000	10.5	10
95 EU		8000	10.5	10
110 SU	TR 205	2000	15.5	10
110 HU	TR 225	4000	15.5	10
110 EU		8000	17.0	10
150 SU	TR 208	2000	24.0	11
150 HU	TR 227	4000	24.0	11
150 EU		8000	24.0	11
200 SU	TR 210	2000	37.0	11
200 HU	TR 231	4000	37.0	11
200 EU		8000	37.0	11
250 SU	TR 214	2000	43.0	12
250 HU	TR 267	4000	43.0	12
250 EU		8000	43.0	12
350 SU	TR 216	1500	72.0	12
350 HU	TR 278	3000	72.0	12
350 EU		6000	72.0	12
550 SU	TR 286	1700	99.0	13
550 HU	TR 287	2600	99.0	13
550 EU		5000	95.0	13
550 SUP		1700	125.0	13
550 HUP		2600	125.0	13
550 EUP		5000	120.0	13
650 SU	TR 288	1450	116.0	14
650 HU	TR 289	2200	116.0	14
650 EU		4100	116.0	14
650 SUP		1450	155.0	14
650 HUP		2200	155.0	14
650 EUP		4100	150.0	14
750 SU	TR 291	1200	132.0	15
750 HU	TR 295	1850	132.0	15
750 EU		3500	132.0	15
750 SUP		1200	180.0	15
750 HUP		1850	180.0	15
750 EUP		3500	180.0	15
900 HT	TR 308	1450	170.0	16
900 ET		2750	173.0	16
900 SU	TR 304	950	166.0	16
900 HU	TR 308	1450	173.0	16
900 EU		2750	167.0	16
900 YT		3000	165.0	17
900 ZT		4000	171.0	17
900 SUP		950	227.0	17
900 HTP		1450	229.0	17
900 ETP		2750	228.0	17

CATALOG #	ANSI	CANTILEVER	LEAKAGE	PAGE
1050 ST	TR 312	800	205.0	18
1050 HT	TR 316	1250	204.0	18
1050 ET		2300	206.0	18
1050 SU	TR 312	800	209.0	18
1050 HU	TR 316	1250	207.0	18
1050 EU	TR 362	2300	207.0	18
1050 YT		3500	209.0	19
1050 ZT		5000	317.0	19
1050 STP		800	268.0	19
1050 HTP		1250	271.0	19
1050 ETP		2300	270.0	19
1300 ST	TR 324	1000	241.0	20
1300 HT	TR 367	1450	232.0	20
1300 ET	TR 369	2050	234.0	20
1300 SU	TR 324	1000	242.0	20
1300 HU		1450	244.0	20
1300 EU	TR 368	2050	240.0	20
1300 YT		3000	237.0	21
1300 ZT		4000	233.0	21
1300 STP		1000	326.0	21
1300 HTP		1450	322.0	21
1300 ETP		2050	315.0	21
1470 HT	TR 371	1170	273.0	22
1470 ET	TR 373	1750	274.0	22
1470 HTP		1000	376.0	22
1470 ETP		1750	373.0	22
1470 SU	TR 330	900	272.0	22
1470 EU	TR 372	1750	273.0	22
1550 ST		1000	334.0	23
1550 HT	TR 379	1700	283.0	23
1550 ET		2500	315.0	23
1550 HTP		1700	373.0	23
1800 ST	TR 391	1400	340.0	24
1800 HT		1750	346.0	24
1800 YT		3500	337.0	24
1800 STP		1400	450.0	24
1800 ETP		2500	371.0	24
2050 ST		1200	416.0	25
2050 HT		2000	452.0	25
2050 ET		3000	414.0	25
2050 STP		1200	557.0	25

S = Standard Strength
H = High Strength
E = Extra High Strength

U = Uniform, Upright and Underhung
T = Tapered, Upright Only

P = Pollution/High Leakage
Y = Higher Cantilever Option
Z = Higher Cantilever Option

BCD = Bolt Circle Diameter
Dt = Diameter Top Fitting
Db = Diameter Bottom Fitting

PPC INSULATORS

The very Best.

That's what we deliver.

Only a company that develops, produces and delivers products worldwide can provide the optimal solution for your requirements.

The specialists of **PPC** Insulators are dedicated to supplying you with superior advice and global support. **PPC** Insulators quality products and service provide time-tested value to fulfill your needs!

Please visit us on the web at www.ppcinsulators.com

SEVES

PPC Insulators is a SEVES company

www.seves.com
www.ppcinsulators.com

Revision 1/8-2008